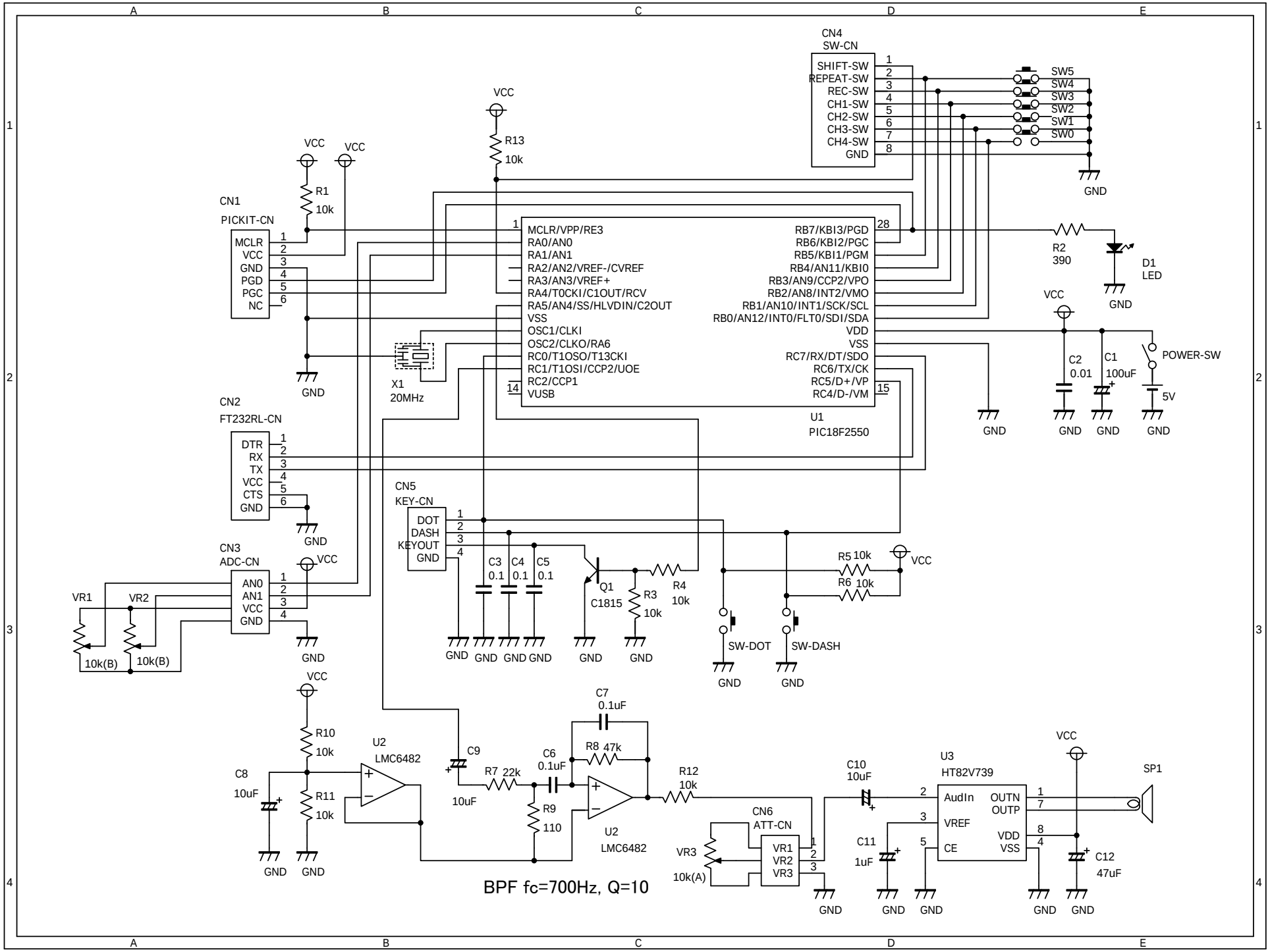
CN4
SW-CN
SHIFT-SW
REPEAT-SW
REC-SW
CH1-SW
CH2-SW
CH3-SW
CH4-SW
GND
SW5
SW4
SW3
SW2
SW1
SW0
VCC
R13
10k
R1
10k
CN1
PICKIT-CN
MCLR
VCC
GND
PGD
PGC
NC
MCLR/VPP/RE3
RA0/AN0
RA1/AN1
RA2/AN2/VREF-/CVREF
RA3/AN3/VREF+
RA4/T0CKI/C1OUT/RCV
RA5/AN4/SS/HLVDIN/C2OUT
VSS
OSC1/CLKI
OSC2/CLKO/RA6
RC0/T1OSO/T13CKI
RC1/T1OSI/CCP2/UOE
RC2/CCP1
VUSB
RB7/KBI3/PGD
RB6/KBI2/PGC
RB5/KBI1/PGM
RB4/AN11/KBI0
RB3/AN9/CCP2/VPO
RB2/AN8/INT2/VMO
RB1/AN10/INT1/SCK/SCL
RB0/AN12/INT0/FLT0/SDI/SDA
VDD
VSS
RC7/RX/DT/SDO
RC6/TX/CK
RC5/D+/VP
RC4/D-/VM
U1
PIC18F2550
X1
20MHz
R2
390
D1
LED
C2
0.01
C1
100uF
POWER-SW
5V
CN2
FT232RL-CN
DTR
RX
TX
VCC
CTS
GND
CN5
KEY-CN
DOT
DASH
KEYOUT
GND
C3
0.1
C4
0.1
C5
0.1
Q1
C1815
R3
10k
R4
10k
R5 10k
R6 10k
SW-DOT
SW-DASH
CN3
ADC-CN
AN0
AN1
VCC
GND
VR1
VR2
10k(B)
10k(B)
R10
10k
C8
10uF
R11
10k
U2
LMC6482
C9
10uF
R7 22k
C6
0.1uF
R9
110
C7
0.1uF
R8 47k
U2
LMC6482
R12
10k
CN6
ATT-CN
VR1
VR2
VR3
VR3
10k(A)
C10
10uF
C11
1uF
U3
HT82V739
AudIn
VREF
CE
OUTN
OUTP
VDD
VSS
SP1
C12
47uF
BPF fc=700Hz, Q=10